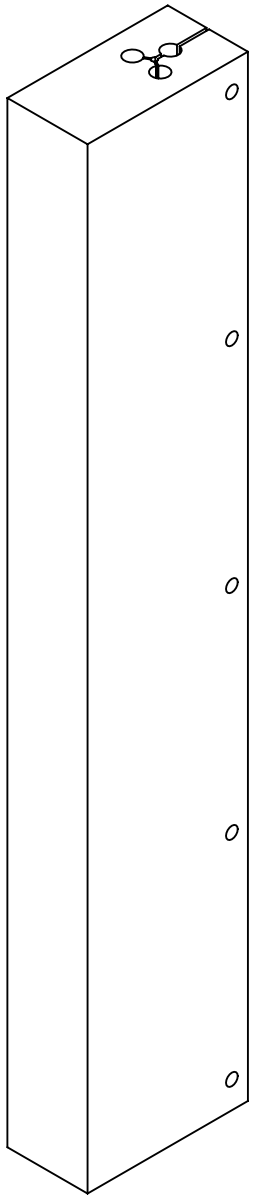

FRONT: 2:3

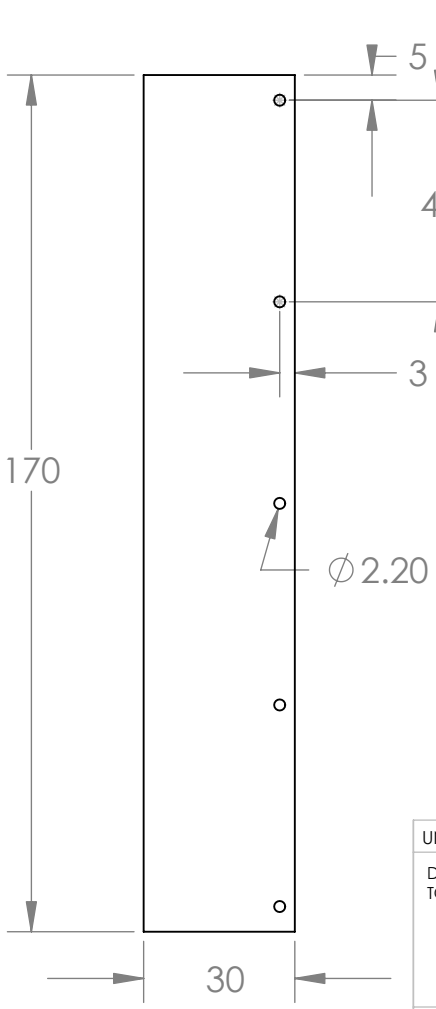

TOP: 4:1

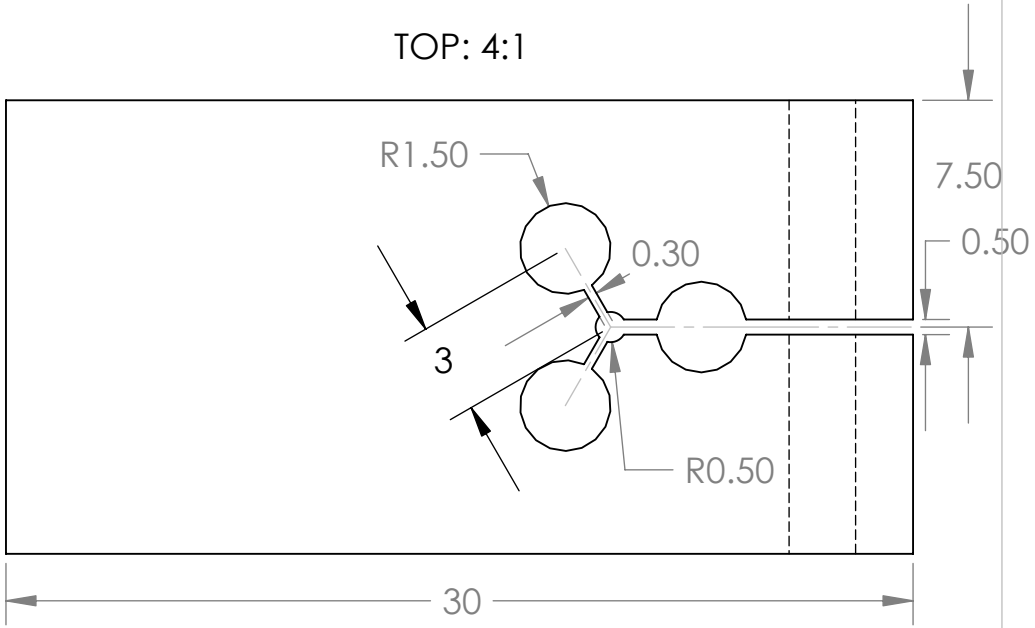

All holes on top face are through all. Center hole is 1.00mm in diameter. Three surrounding holes are 120 degrees apart, 3.00mm from center hole and have 3.00mm diameter.

Holes on front face are through clear holes, large enough for #2 screws. 40.00mm apart and 5.00mm from ends.

PROPRIETARY AND CONFIDENTIAL

THE INFORMATION CONTAINED IN THIS DRAWING IS THE SOLE PROPERTY OF STANFORD UNIVERSITY. ANY REPRODUCTION IN PART OR AS A WHOLE WITHOUT THE WRITTEN PERMISSION IS PROHIBITED.

UNLESS OTHERWISE SPECIFIED:		NAME	DATE
DIMENSIONS ARE IN MM TOLERANCES: 0.01	DRAWN	Santhi Elayaperumal	8/12/08
	CHECKED		
	ENG APPR.		
	MFG APPR.		
INTERPRET GEOMETRIC TOLERANCING PER:	Q.A.		
MATERIAL Aluminum	COMMENTS:		
FINISH			
DO NOT SCALE DRAWING			

TITLE:

EDM Fixture for 18ga Needle

SIZE **A**

DWG. NO. 18ga_EDMFixture

REV

WEIGHT:

SHEET 1 OF 1

5 4 3 2 1